WPL33E

3,300 LB. CAPACITY

LITHIUM-ION PALLET TRUCK

SPECIFICATIONS

THE ESSENTIAL PALLET TRUCK

The WPL33E is a pallet truck designed to be simple, intuitive and flexibile. Its compact size, light weight and intuitive controls can help operations move from manual equipment to powered pallet trucks, reducing fatigue and saving time for employees. It includes an onboard battery charger and uses easy-exchange batteries, making this truck adaptable to many applications.

FEATURES

Innovative Easy-Exchange Batteries

A lightweight lithium-ion battery pack slides easily in and out of the storage slot, accessible on the side of the truck. Connecting the battery pack is easy through a durable steel cover on top of the truck. Recharging can be done with either the onboard charger or using an external charger for application using multiple batteries.

Intuitive Controls

WPL33E has simple controls for drive, lift and lower. Powered lift eliminates the need to manually jack materials and push-button lowering assists with drop-off in tight spaces. LED lights indicate the battery's state of charge during operation and when charging. A keyed switch helps to avoid unauthorized use.

A Simple, Yet Rugged Design

Features such as stamped steel forks and an optional grooved traction tire help the WPL33E stand up to applications with uneven surfaces and heavy loads. Creep speed control allows the truck to be moved in tight spaces with the control arm in the upright position.

DIAGRAMS

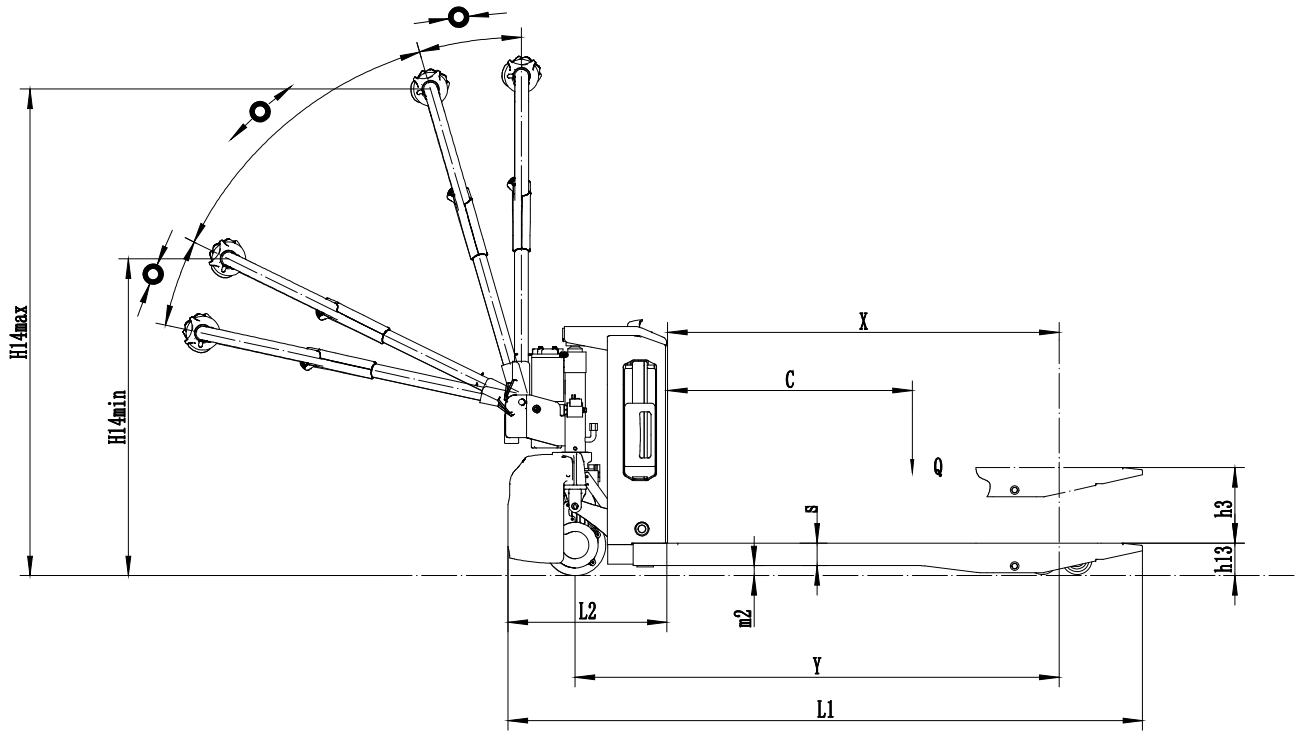

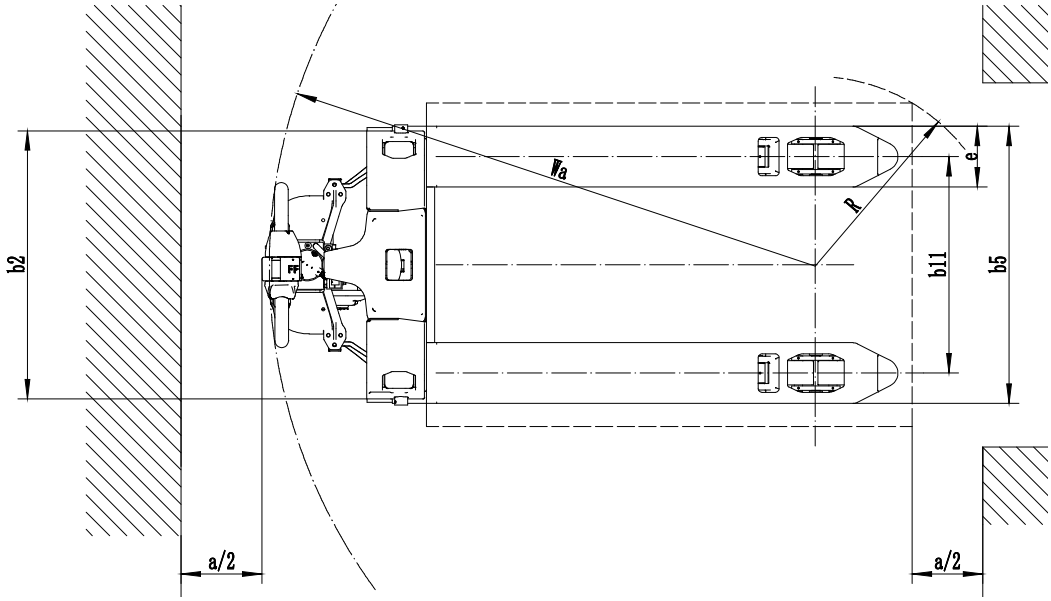

SPECIFICATIONS

Distinguishing mark	1.1	Manufacturer			Big Joe
	1.2	Model designation			WPL33E
	1.3	Drive			Electric
	1.4	Operator type			Pedestrian
	1.5	Load capacity	Q	lb.	3300
	1.6	Load center distance	c	in.	24
	1.8	Load distance, center of drive axle to fork	x	in.	37.5
	1.9	Wheelbase	y	in.	46.5
Service weight	2.1	Service weight		lb.	255
	2.2	Axle loading, laden (front / rear)		lb.	1055 / 2500
	2.3	Axle loading, unladen (front / rear)		lb.	190 / 65
Tires/chassis	3.1	Tire type			Polyurethane
	3.2	Tire size, front			8.3x2.8
	3.3	Tire size, rear			2.9x3.5
	3.5	Wheels, number (front/rear) x=drive wheels			1x / 2
	3.7.1	Tread width, rear	b11	in.	21.0
Dimensions	4.4	Lift stroke	h3	in.	4.1
	4.9	Height of tiller handle in drive position MIN / MAX	h14	in.	29.5 / 46.9
	4.15	Lowered height	h13	in.	3.2
	4.19	Overall length	l1	in.	61.0
	4.20	Length to face of forks	l2	in.	15.7
	4.21	Overall width	b1/b2	in.	27.4
	4.22	Fork dimensions	s x e x l	in.	2 x 5.9 x 45.3
	4.25	Fork spread	b5	in.	27.0
	4.32	Ground clearance, center of wheelbase	m2	in.	1.0
	4.35	Turning radius	Wa	in.	53.5
Performance Data	5.1	Travel speed, laden/unladen		mph	2.5 / 2.8
	5.2	Lifting speed, laden/unladen		fpm	3.3 / 3.9
	5.3	Lowering speed, laden/unladen		fpm	11.4 / 9.0
	5.8	Max gradeability, laden/unladen		%	6 / 16
	5.10	Service brake			Electromagnetic
Electric	6.1	Drive motor rating S2 60min		kW	0.75
	6.2	Lift motor rating at S3 15%		kW	0.5
	6.4	Battery voltage / nominal capacity		V/Ah	24 / 20
	6.5	Battery weight		lb.	11
Additional	10.5	Steering system			Mechanical
	15.1	Charger output current		A	10

STANDARD/OPTIONAL EQUIPMENT

● Standard
○ Optional

Electrical System	24V electrical system with Curtis travel control	●
	Powered forward/reverse travel control	●
	Ergonomic control head with key switch and horn	●
	Auto reversing switch	●
Battery and Charging	Easy exchange 0.48kWh (24V / 20 Ah) lithium-ion battery	●
	Additional 0.48kWh (24V / 20 Ah) lithium-ion battery	○
	Onboard 120V, 240W (10A) battery charger	●
Drive System	Brushless permanent magnet DC drive motor	●
	Traction drive tire	○
Chassis	Tapered forks with single load wheel	●
	LED battery discharge indicator	●
Warranty	24 months / 1,000 hours powertrain warranty	●
	12 months full truck warranty	●